Tank Replacement Locating Guide and General Instruction Sheet

WARNING

Installation of this service kit requires sheet metal modification, refrigeration service expertise including brazing, freon recovery and recharging. ***All service work must be performed by a qualified service technician. Do not attempt this replacement if you do not fully understand these requirements.*** This tank replacement kit will require one or more of the following steps:

- Brazing of refrigerant and water line (copper) connections
- Revising the mounting system on the cooler shelf including drilling holes or replacing shelf.
- Revising refrigeration line shape and routing
- Revising refrigeration system line hook-ups
- Revising water line sizes
- Revising water line shapes and routings

Page No.	Table Of Contents
1 - 4	Tank Replacement Instructions
5	Tank Location For ECU/ECP Units
6	Template For Tank Location
7	Tank Location For ERC Units
8	Tank Location For ECH/SJ Units

Reference Information
Old "Copper" Tank

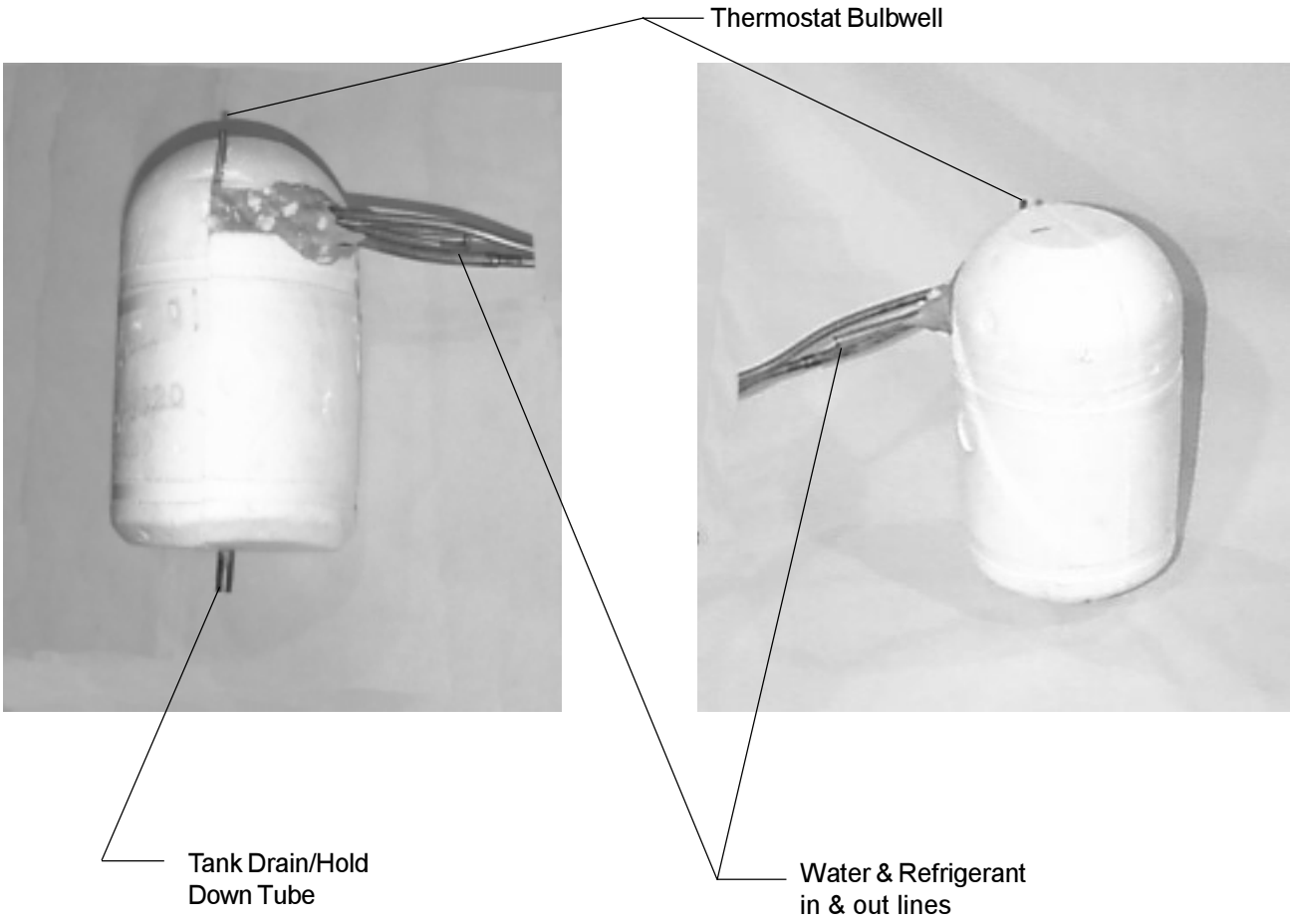

FIG. 1

97823C (1/02)

Reference Information
New "Stainless Steel" Tank

FIG. 2

Reference Information
New "Stainless Steel" Tank

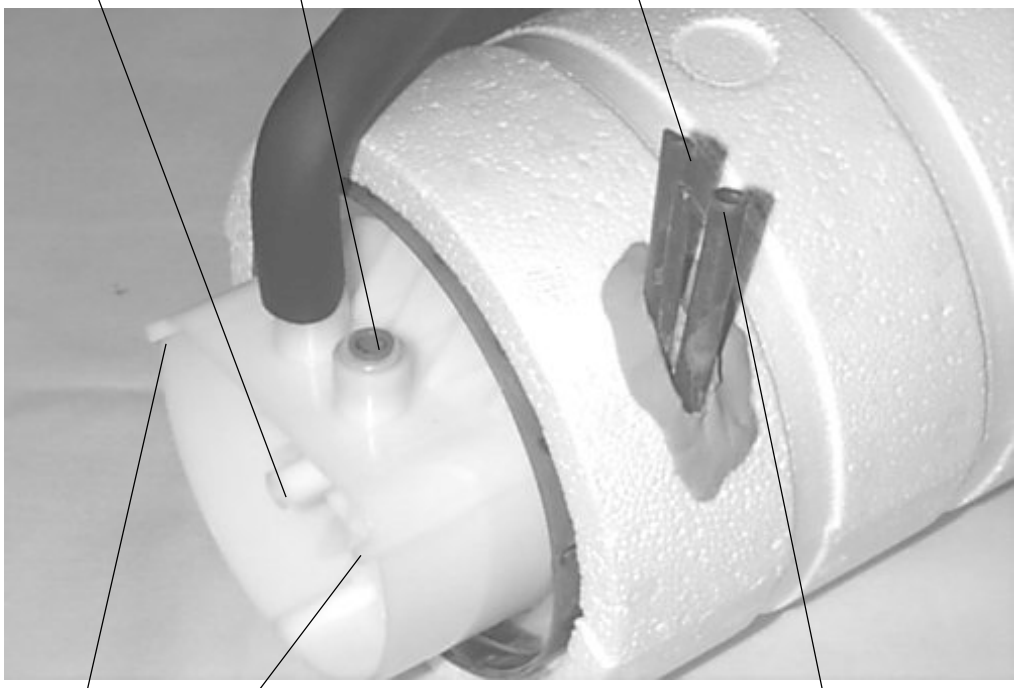

FIG. 3

Installation Procedure

1. Remove original chiller
2. Refer to location reference guides and full size template on page 6. Locate full size template per reference guide for model being serviced. Drill Chiller Tank mounting holes.
3. Mount chiller tank to shelf with mounting screw and washer.
4. Revise size of the Refrigerant suction line to adapt to the Refrigerant Outlet on the Chiller Tank. Reshape the suction line as required. Braze connect the Suction Line to the Refrigerant Outlet.
5. Insert the capillary tube into the Refrigerant Inlet. Braze connect.
6. Connect the water inlet line into the Chiller Tank Water Inlet. Revise the water tube size and routing shape as required. Braze connect the water inlet line connection.
7. Revise the water outlet line to a ¼" tube connection. The ¼" tube connection must be round and free of surface defects (solder, cuts, etc.). Any surface defects will obstruct the ability of the quick connect fitting to seal. Insert the straight end of the ¼" tube into the quick connect connection. Refer to figure 5 for details on how the Guest connection functions.
8. Insert thermostat cap tube into the Chiller Tank bulbwell.
9. Check all connection points for leaks. Repair as required.
10. Recharge the unit and return to service.

FIG. 4

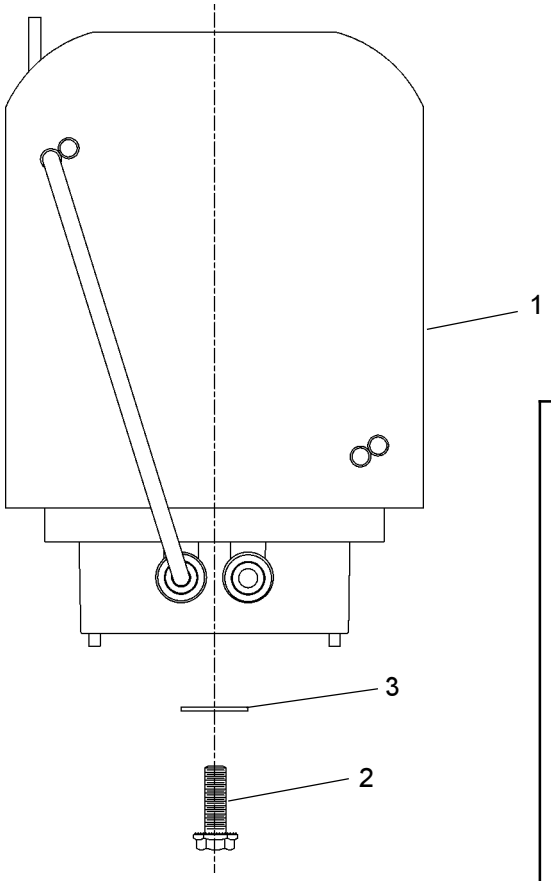

PARTS LIST	
1	EVAPORATOR TANK
2	SCREW #12 X 1.50" LONG
3	WASHER - .250" I.D.

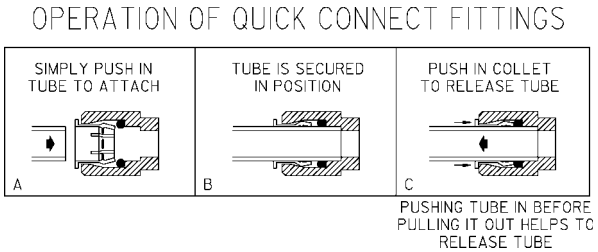

FIG. 5

ECU/ECP UNIT

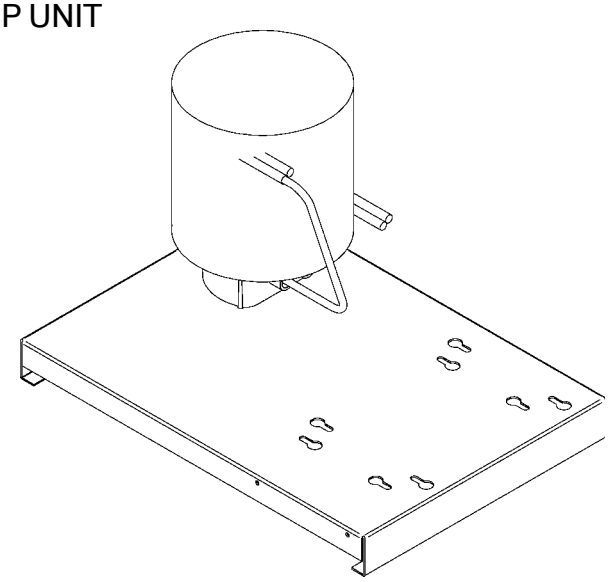

Modify existing baseplate.
Mount chiller as shown

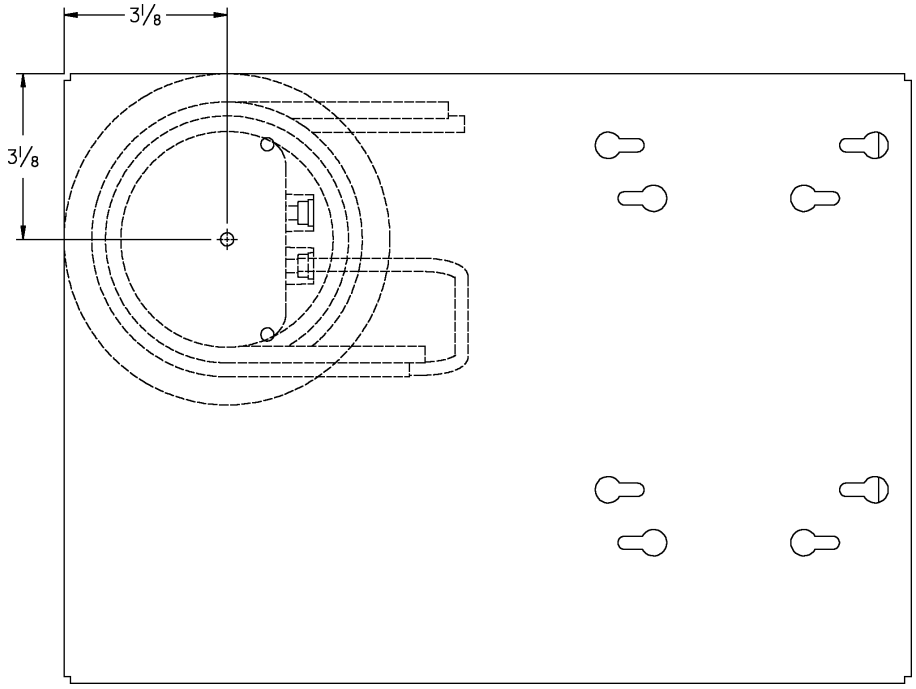

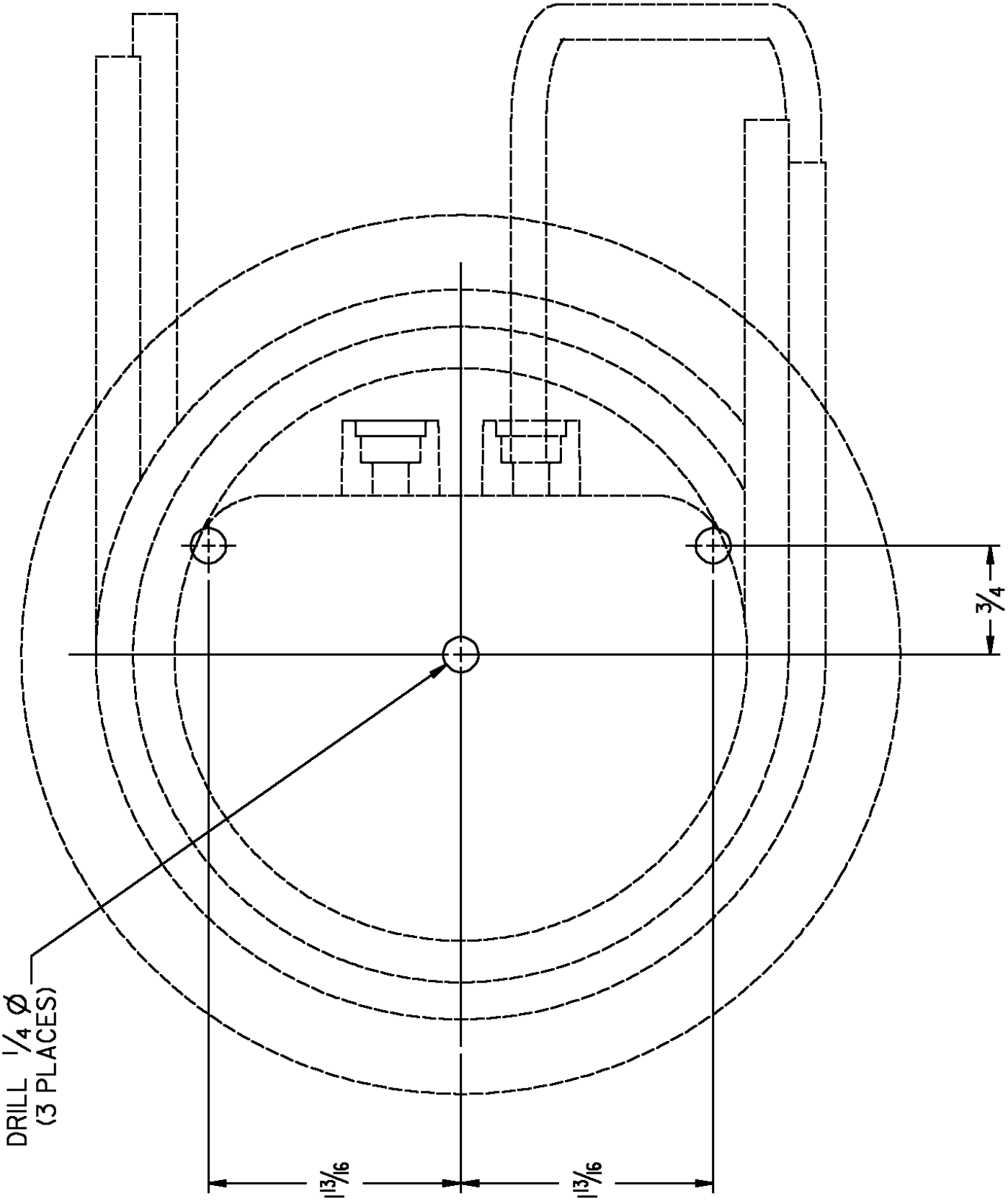

FULL SIZE TEMPLATE

ERC UNIT

Evaporator installed
(Back view of unit)

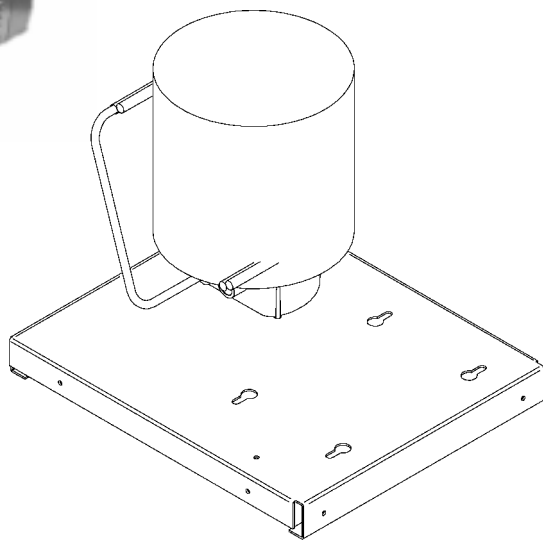

Modify existing baseplate.
Mount chiller as shown

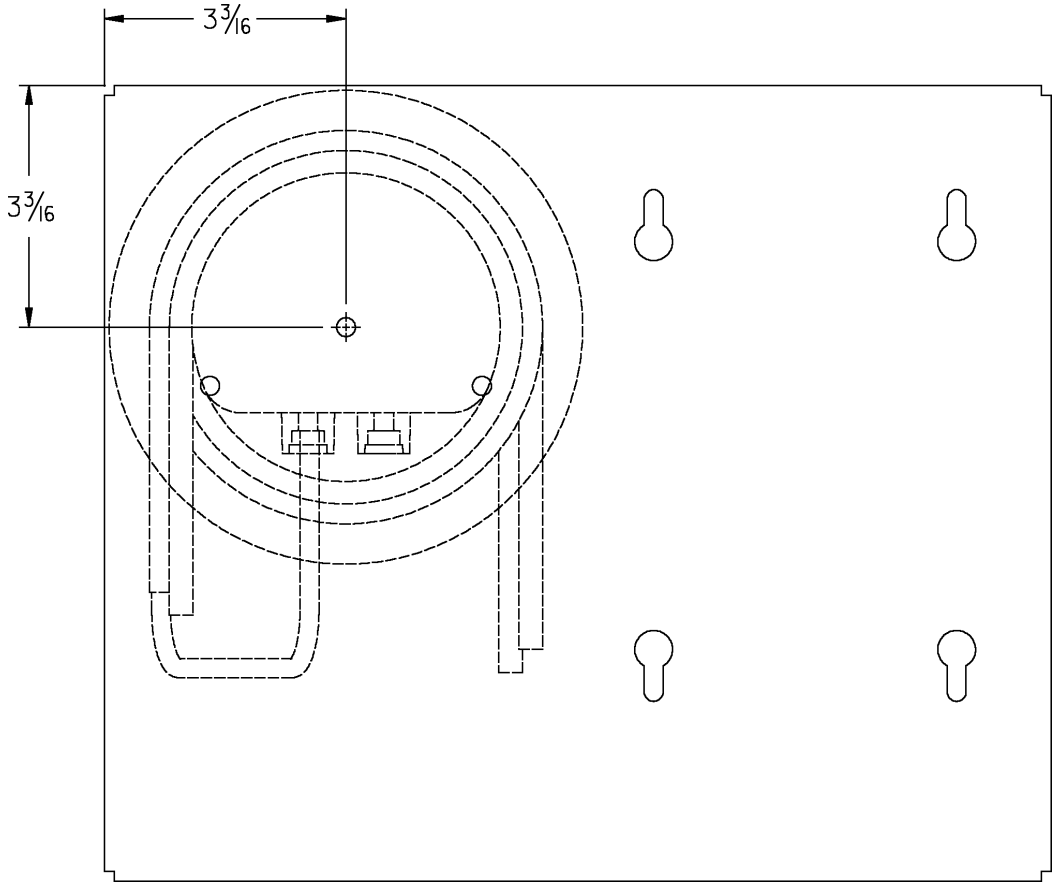

ECH/SJ UNIT

PARTS LIST		
1	27303C	BASEPLATE

Evaporator installed
(Back view of unit)

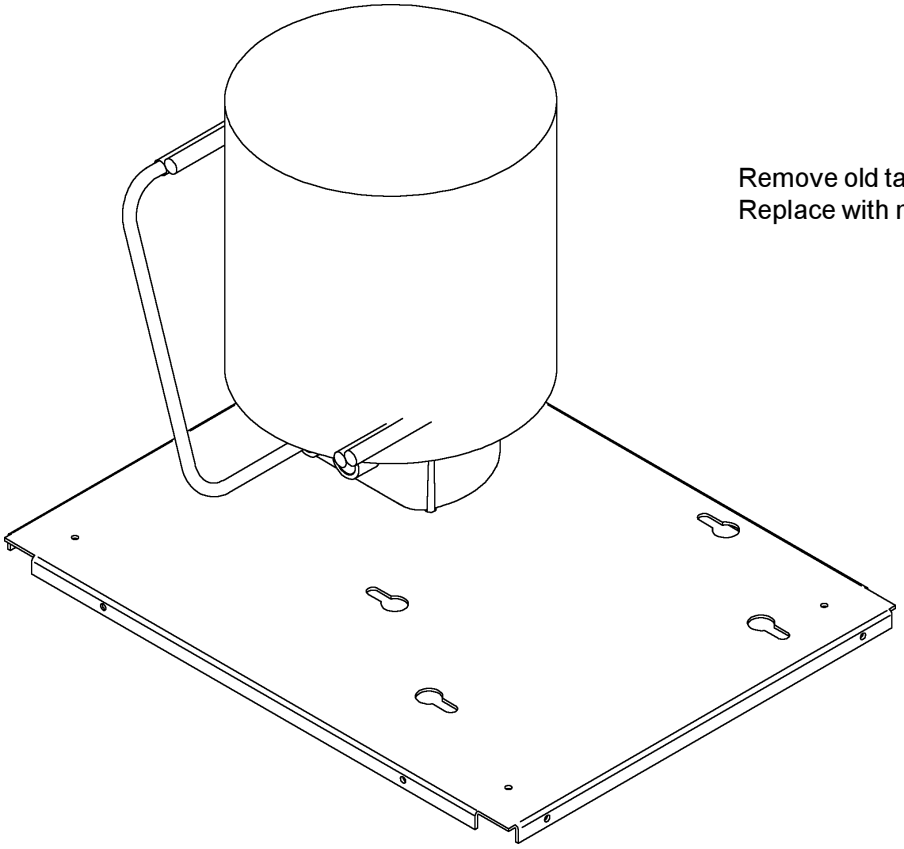

Remove old tank & baseplate.
Replace with new tank & baseplate.